Crimping Tool　For Non-Insulated Terminals

TP-5S Capacity IEC/DIN:0.5/1.5/2.5/4/6㎟　AWG:22/20/16/14/12/10
JIS:0.3/0.5/1.25/2/3.5/5.5㎟

- Small and Light Weighted type.
- Crimping up to 6sq(IEC standard)/ AWG10 cables with one side hand.

MADE IN JAPAN

CRIMPING TOOL

For Non-Insulated Terminals: TP-2 TP-8 TP-8P TP-14 TP-5 TP-5M TP-5S TP-3

For E-Type Sleeve Terminals: TP-R

SAFE & SECURE! SPEEDY CRIMPING

JIS JQA
JIS C 9711
JQ0314008

ALL TESTS PASSED

Continuous durability test 30,000 times · Tensile test · Salt water spraying · Heat aging · Electrical resistance · Vibration fatigue

Temporary holding function

Cables can be inserted smoothly into terminals due to the deformless temporary holding function.

*Temporary holding function is not loaded on TP-2

Both side colored size marks

Colored size marks help you to check the size of crimping die even in the room where is unsufficiently lighted and improve your work efficiency.

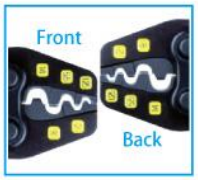

Toggle mechanism

Reducing required loads for each stroke of gear.

Crimp completion checking function

Handles don't open until crimping done.

Clear crimped mark!

Molded elastomer resin cover

Soft texture elastomer grip reduces fatigue of Continuous crimping works.

Crimping Tool Usable Terminals

Terminal (㎟)	0.3	0.5	1.25	2.0	3.5	5.5	8.0	14.0	22.0	38.0
TP-2 (JIS)			○	○						
TP-3		○	○	○	○					
TP-5 (JIS)			○	○		○				
TP-5S	○		○	○	○					
TP-5M			○	○	○	○				
TP-8 (JIS)			○	○		○	○			
TP-8P (JIS)			○	○		○	○			
TP-14 (JIS)			○	○		○	○	○		
TP-22 (JIS)						○	○	○	○	
TP-38 (JIS)							○	○	○	○
TP-R (JIS)	E-L・E-M・E-S									

Specifications

- Material | Alloy steel
- Head hardness [HRC] | 42～48
- Handle part hardness [HRC] | 43～47
- Handle cover | Elastomeric molded resin grips

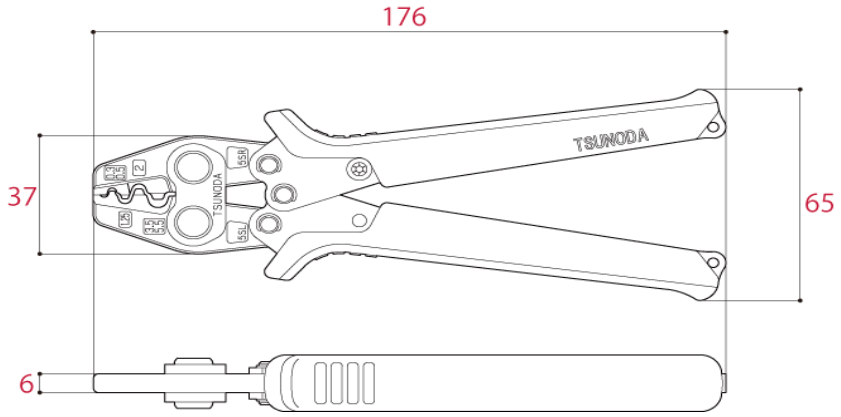

	Size[mm]				Weight [g]	EAN-code (4952269)
	Overall length	Head width	Head thickness	Handle width		
TP-5S	176	37	6	65	220	113693

Terminal Size			
JIS standard ㎟	IEC・DIN standard ㎟	American Wire Gauge	Crimped Mark
0.3	-	22	0
0.5	0.5	20	
1.25	1.5	16	1
2	2.5	14	2
3.5	4	12	5
5.5	6	10	
*One side of head is IEC/DIN standard size indicated. The other side is JIS standard size.			